REVISION HISTORY			
REV.	DESCRIPTION	DATE	DRAWN BY
1	ADDED MACHINING ON ADDITIONAL SIDE	10/3/2017	K. NEPOMUCENO
2	UPDATED TO AMDS-1	7/23/2018	A. MILLS

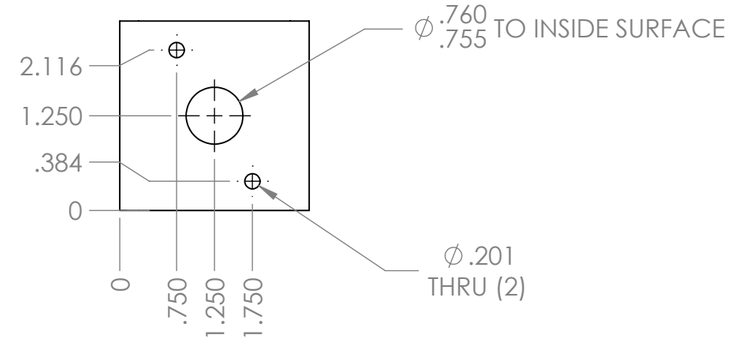

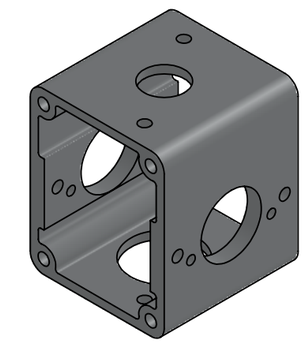

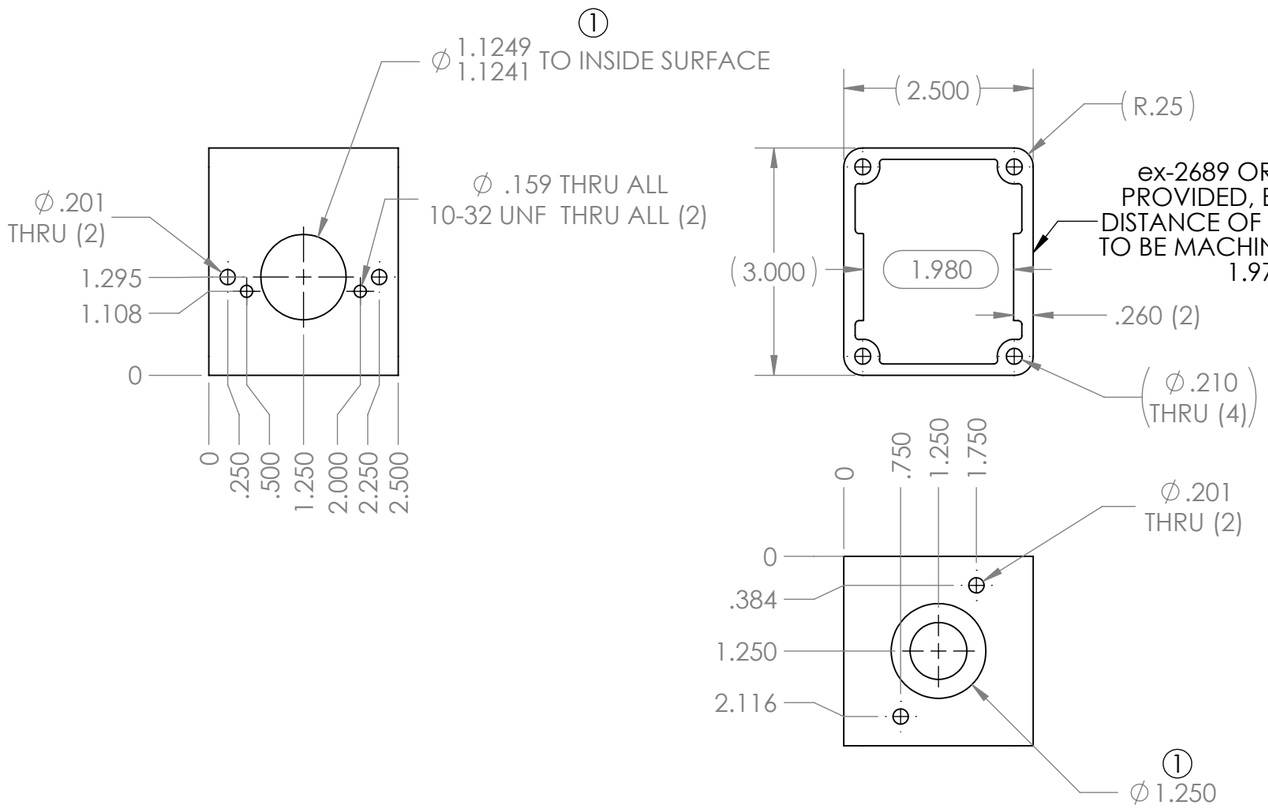

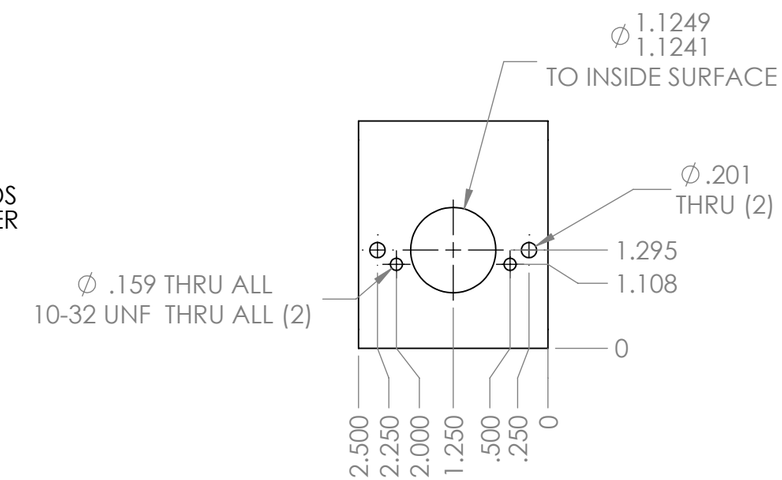

*** SEE CAD FOR ADDITIONAL TOOLPATH INFO***

IF MATERIAL PROVIDED IS am-2689 ADDED MACHING ONLY TO BOTTOM FACE

UNLESS OTHERWISE SPECIFIED:	COMMENTS:		AndyMark
DIMENSIONS ARE IN INCHES	DUAL DIMENSIONS ARE IN MILLIMETERS.		TITLE: LJ BEVELBOX HOUSING
TOLERANCES: FRACTIONAL ±1/16; ANGULAR: MACH ±1°; ANGULAR: BEND ±5°; ONE PLACE DECIMAL ±0.1; TWO PLACE DECIMAL ±0.01; THREE PLACE DECIMAL ±0.005; FOUR PLACE DECIMAL ±0.0005	BREAK ALL SHARP EDGES.		
MATERIAL 6005A-T61 ALUMINUM		NAME / DATE	SIZE B / DWG. NO. am-2689a / REV 2
FINISH TUMBLED	CHECKED	NL 7/23/2018	
	ENG APPR.		
	MFG APPR.		
DO NOT SCALE DRAWING	Q.A.		SCALE: 1:2 / SHEET 1 OF 1